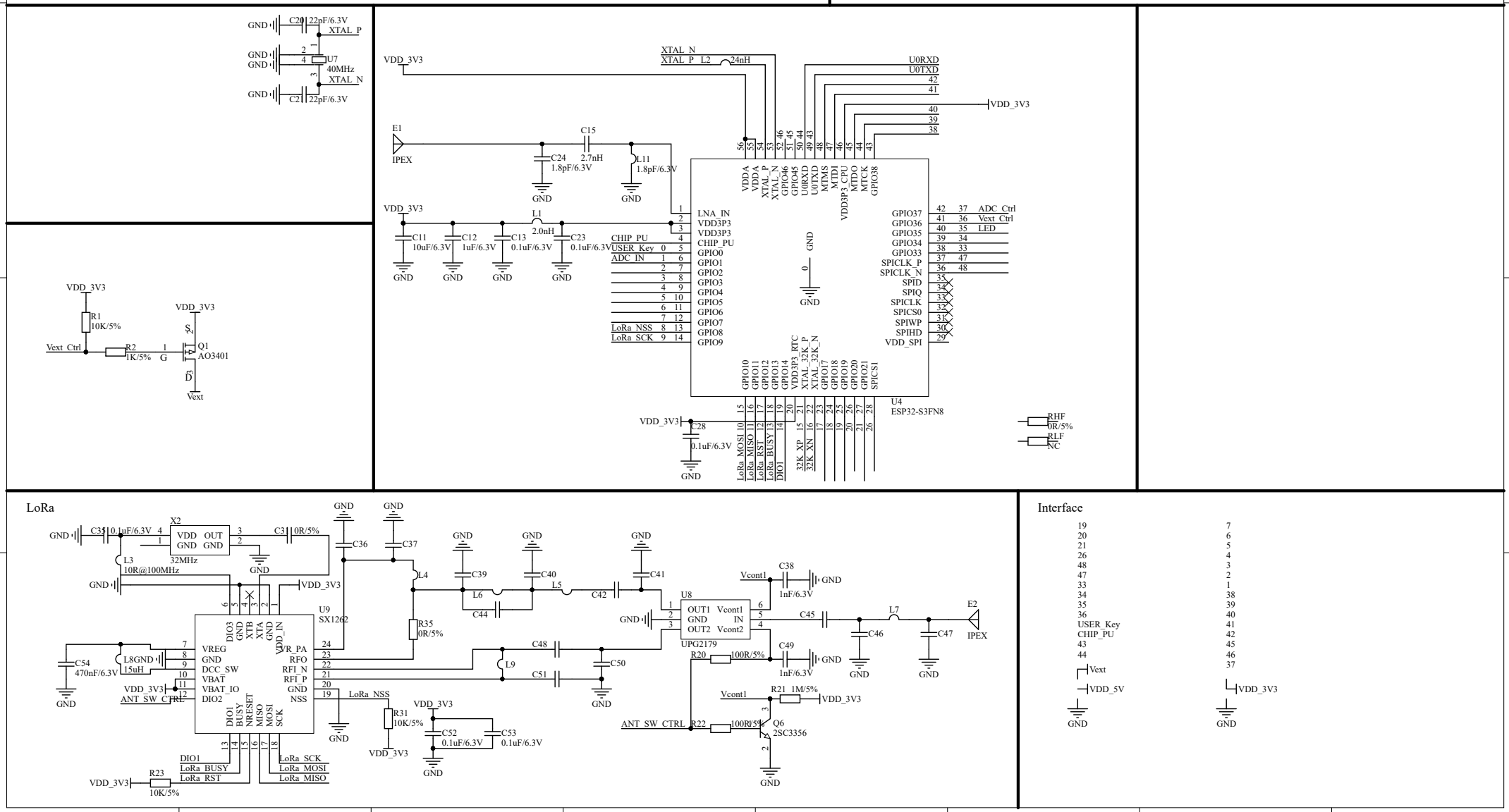
LoRa
Interface
U4
ESP32-S3FN8
U9
SX1262
U8
UPG2179
Q1
AO3401
Q6
2SC3356
X2
32MHz
U7
40MHz
E1
IPEX
E2
IPEX
VDD_3V3
XTAL_P
XTAL_N
GND
Vext
Vext_Ctrl
LoRa_NSS
LoRa_SCK
LoRa_MOSI
LoRa_MISO
LoRa_RST
LoRa_BUSY
DIO1
ANT_SW_CTRL
USER_Key
CHIP_PU
ADC_Ctrl
LED
VDD_5V